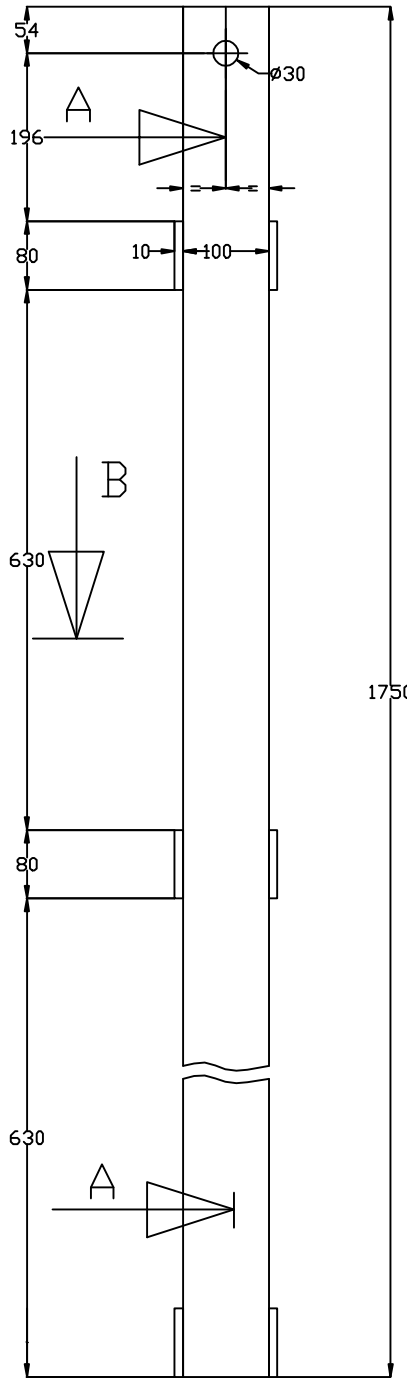

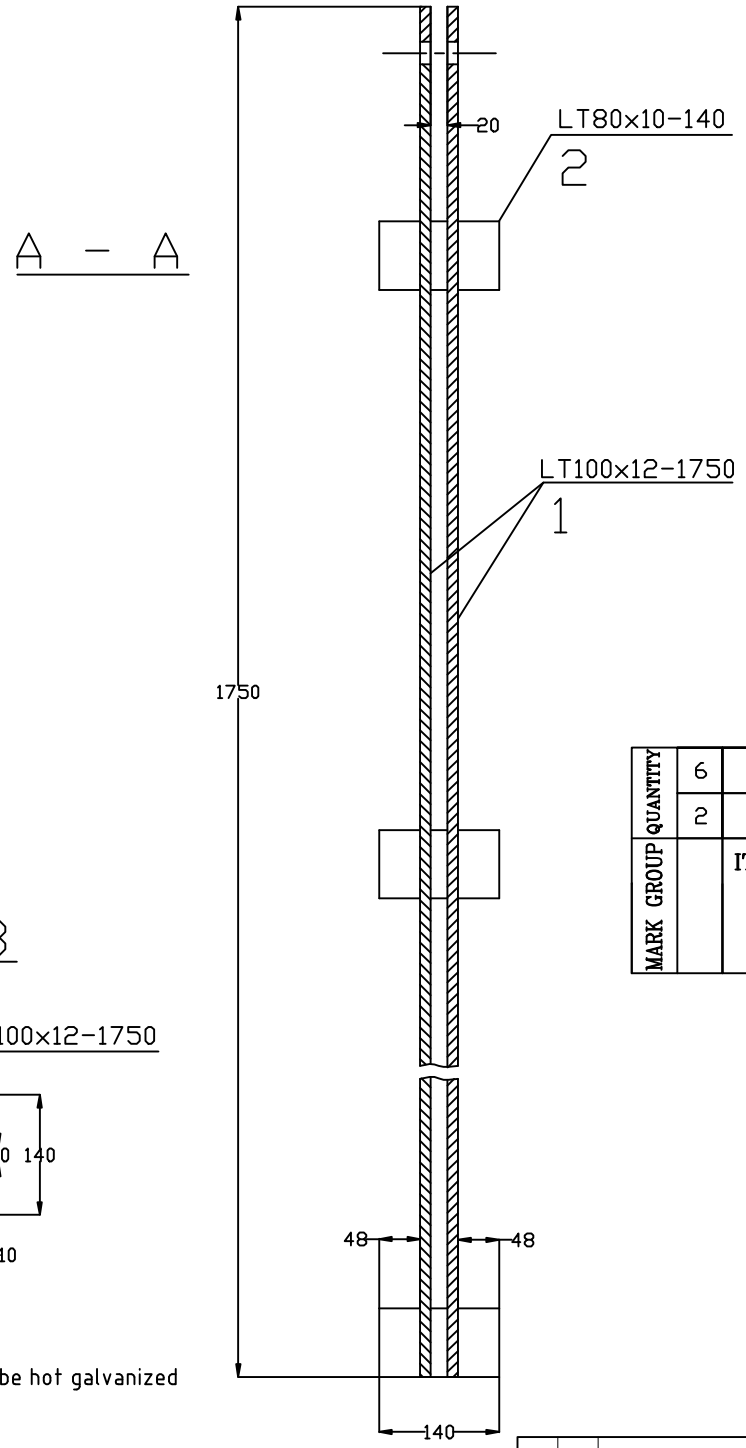

B – B

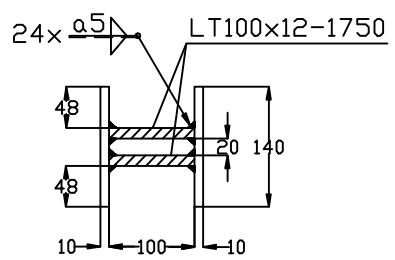

NOTE:
After welding and drilling will be hot galvanized
AT/OL/Zn600-STAS 7221-90.

MARK	GROUP	QUANTITY	ITEM	DESIGNATION	UNIT MASS kg	MATERIAL TECHNICAL SPECIFICATION
		6	2	PLATE		S235JR
		2	1	LONGERON		S235JR

Proiectat		Material:	20124	Pag.
Desenat			Inlocuieste desen nr. :	
Verificat			Nr. inventar :	
Contr.STAS				
Aprobat				
DIRECTIA INDUSTRIE		Scara:	LEVEL ANCHOR BEAM – BDG132	
		Data:	ANCORA LA NIVEL L=1750 mm	