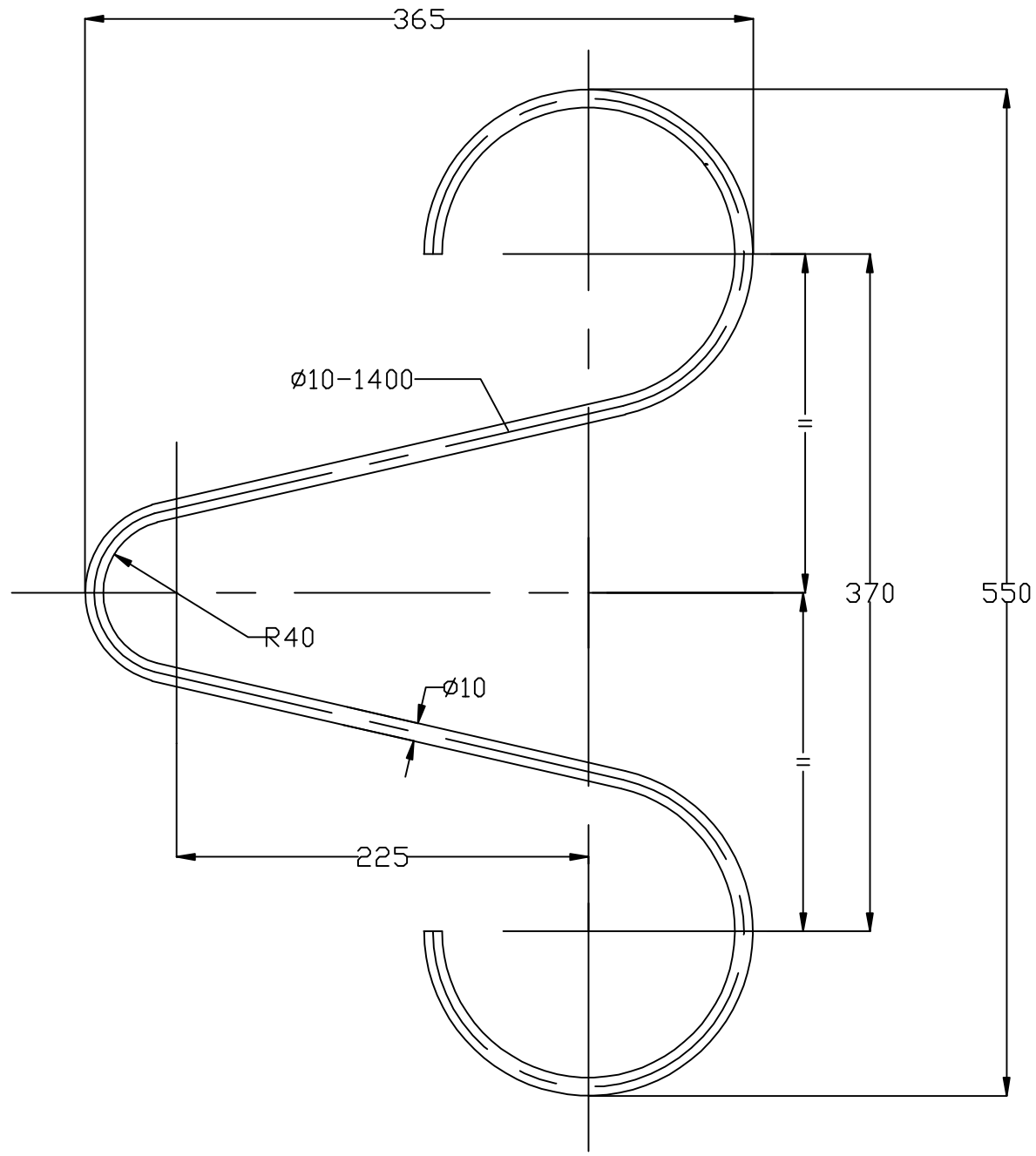

NOTE:

1.Will be hot galvanized AT/OL/Zn600-STAS 7221-90.

2.The eye will be used with the frame for concrete counterweights 0172A1.

3.Material: S235JR

Proiectat	Material:	20128	Pag.
Desenat			
Verificat		Inlocuieste desen nr. :	
Contr.STAS			
Aprobat		Nr. inventar :	
ISAF DIRECTIA INDUSTRIE	Scara:	EYE II – BDG175	
	Data:	OCHI II GHIDARE	