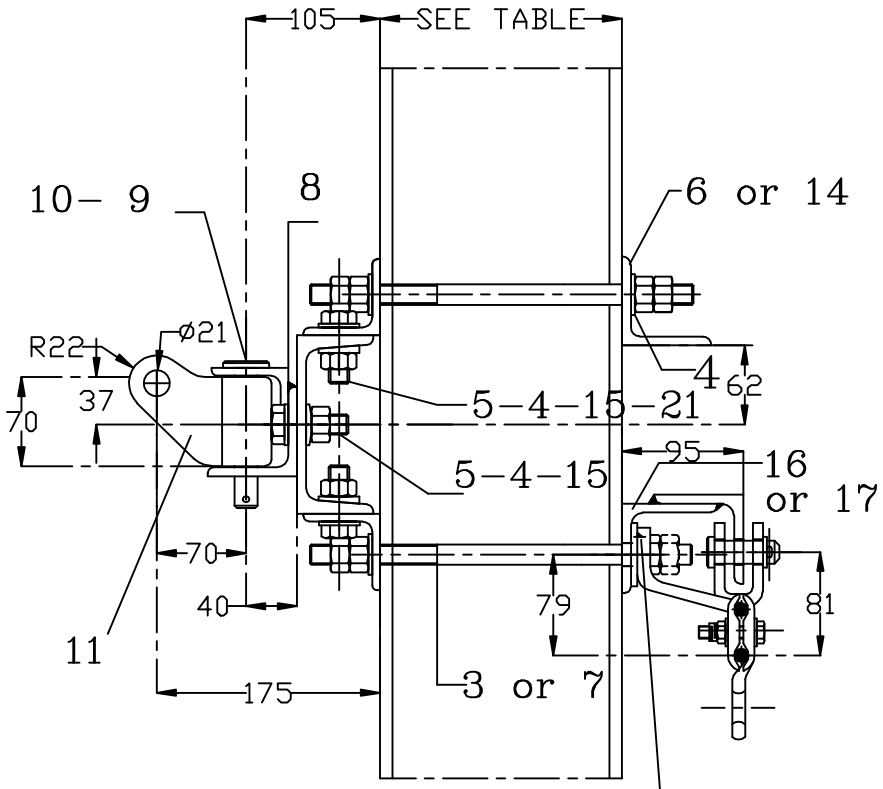

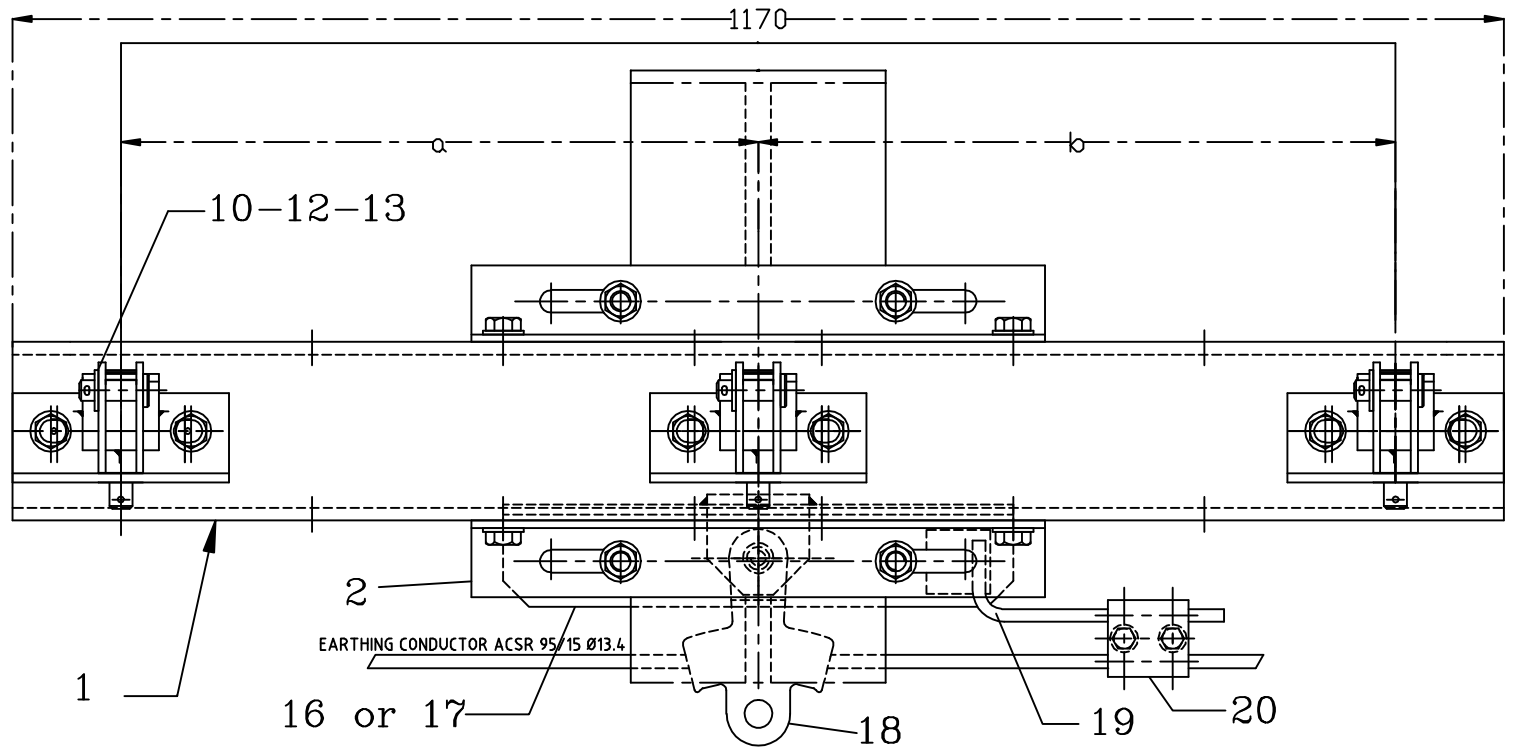

CONTINUOUS BEAD WATERPROOF WELDS MINIMUM THICKNESS: 4mm
BETWEEN SQUARE WASHER AND CONCRETE STEEL ROD

ON H BEAM	ASSEMBLY ALLOCATION	
	2 TOP TUBES SPACING 1.00 m	3 TOP TUBES SPACING 0.50 m
HE 200 TO 240	101	201
H 260 TO 320 (A OR B)	102	202

Note
For cotes a and b see the mounting diagrams.

QUANTITY					ITEM	DESIGNATION	UNIT MASS kg	REFERENCE DRAWING	MARK
4	4	4	4		21	WASHER TYPE U		03LC00BDG142	16A710
1	1	1	1		20	CLAMP	0.59	ELC 2-4.0	
1	1	1	1		19	EARTHING CONNECTION	0.25	03LC00BDG260	101
1	1	1	1		18	EARTHING CONDUCTOR SUSPESION TYPE I	1.30	ELC 13-1.4.0	
1		1			17	COUNTERPLATE WITH EARTHING CONDUCTOR		03LC00BDG102	102
	1		1		16	COUNTERPLATE WITH EARTHING CONDUCTOR		03LC00BDG102	101
10	10	8	8		15	WASHER . CS-16-32-2.8		03LC00BDG142	16A310
1		1			14	COUNTERPLATE		03LC00BDG090	102
3	3	2	2		13	AXIS 20-50		03LC00BDG146	201050
3	3	2	2		12	WASHER M20		03LC00BDG142	20A110
3	3	2	2		11	HINGE STRUT TUBE		E.L.C 13-9.11 A REV C	
6	6	4	4		10	PIN 4.5*40		03LC00BDG145	45A040
3	3	2	2		9	AXIS 18-110		03LC00BDG146	181110
3	3	2	2		8	HINGE SUPPORT		03LC00BDG114	
4		4			7	THREADED ROD M16-450/100		03LC00BDG141	1611E2
	1		1		6	COUNTERPLATE		03LC00BDG090	101
10	10	8	8		5	BOLT HM 16-50/50		03LC00BDG144	1612H1
18	18	16	16		4	WASHER M16N		03LC00BDG142	16A110
	4		4		3	THREADED ROD M16 -350/100		03LC00BDG141	1611C2
2	2	2	2		2	COUNTERPLATE FOR SPREADER		03LC00BDG094	
1	1	1	1		1	SPREADER		03LC00BDG089	
MARK GROUP	202	201	102	101					
	PR21082	PR21081	PR21079	PR20187					

Proiectat		Material:	20187;21079;21081;21082 — Pag.
Desenat			Inlocuieste desen nr. :
Verificat			Nr. inventar :
Contr.STAS			
Aprobat			
DIRECTIA INDUSTRIE		Scara:	SPREADER ASSEMBLY FOR 2 OR 3 STRUT TUBES WITH EARTHING CONDUCTOR (spacing 1mm) – BDG078
		Data:	TRAVERSA 2-3 CONSOLE STALP H240;320 BALAMA CONTRAFISA