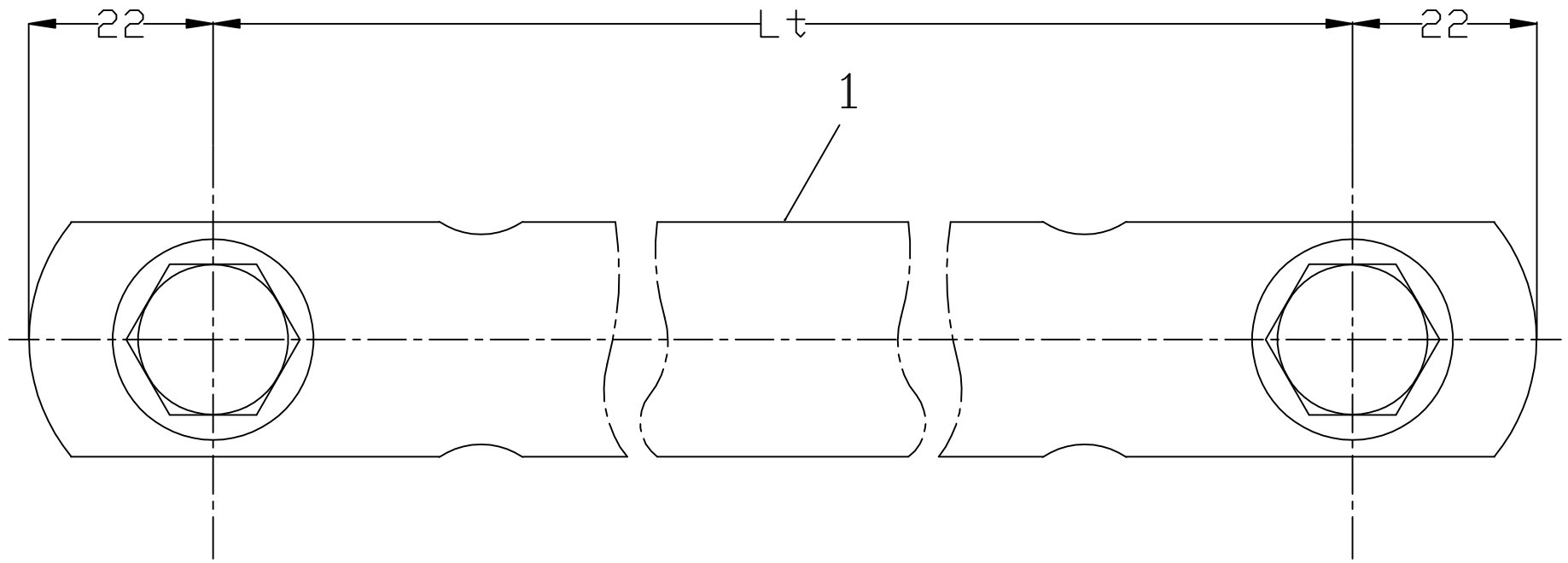

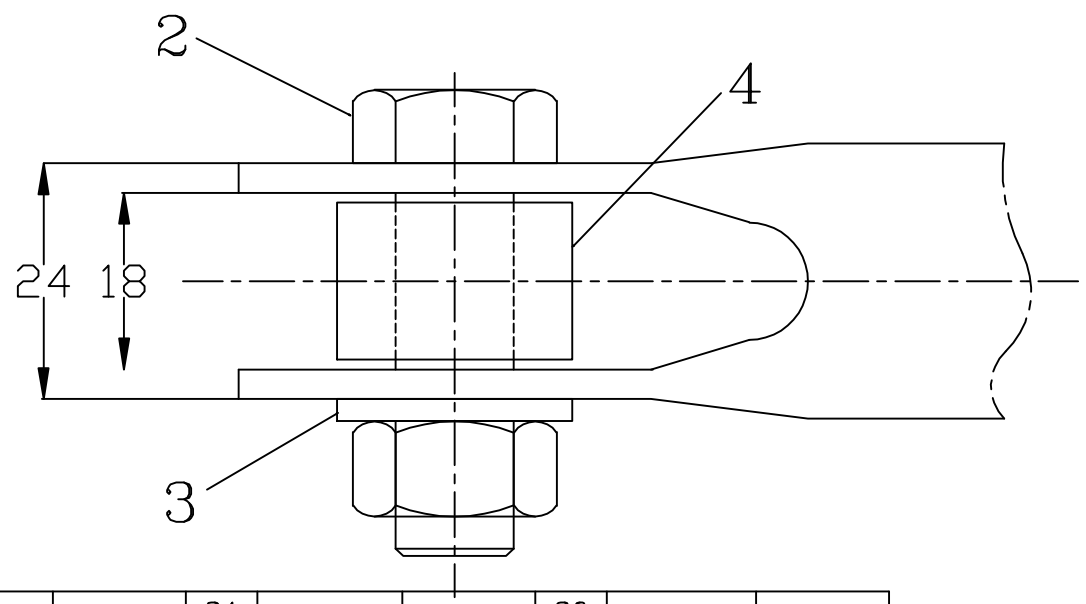

QUANTITY	ITEM	DESIGNATION	UNIT MASS kg	REFERENCE DRAWING	MARK
2	4	WEDGE		ELC 32-9.11.6B	
2	3	WASHER SC 12		03LC00BDG142	12B310
2	2	BOLT M12x40/22 STAINLESS STEEL		03LC00BDG144	1222F4
1	1	TUBE 28-3		03LC00BDG116	

12	L=850 mm	PR20069	24	L=1450 mm	PR21261	36	L=2400 mm	PR23256
11	L=800 mm	PR21075	23	L=1400 mm	PR21259	35	L=2000 mm	PR21652
10	L=750 mm	PR21249	22	L=1350 mm	PR21258	34	L=1950 mm	PR21651
9	L=700 mm	PR21248	21	L=1300 mm	PR21076	33	L=1900 mm	PR21649
8	L=650 mm	PR21247	20	L=1250 mm	PR21257	32	L=1850 mm	PR21648
7	L=600 mm	PR21246	19	L=1200 mm	PR21256	31	L=1800 mm	PR21647
6	L=550 mm	PR21245	18	L=1150 mm	PR21255	30	L=1750 mm	PR20071
5	L=500 mm	PR21244	17	L=1100 mm	PR21254	29	L=1700 mm	PR21265
4	L=450 mm	PR21685	16	L=1050 mm	PR21253	28	L=1650 mm	PR21264
3	L=400 mm	PR21684	15	L=1000 mm	PR21074	27	L=1600 mm	PR21263
2	L=350 mm	PR21683	14	L=950 mm	PR21252	26	L=1550 mm	PR21262
1	L=300 mm	PR21682	13	L=900 mm	PR21251	25	L=1500 mm	PR17055
ITEM	L		ITEM	L		ITEM	L	

Proiectat
Desenat
Verificat
Contr.STAS
Aprobat

Material:

21682–21685;21244–21249;21075;20069;21251;
21252;21074;21253–212579;21076;21261–21265;
17055;20071;21647–21649;21651;21652;23256;17369

Inlocuieste desen nr. :

Nr. inventar :

Pag.

isaf
DIRECTIA INDUSTRIE

Scara:

Data:

AUXILIARY STRUT TUBE
– BDG083

BARA AUXILIARA